# DATA

Complete Signs ©

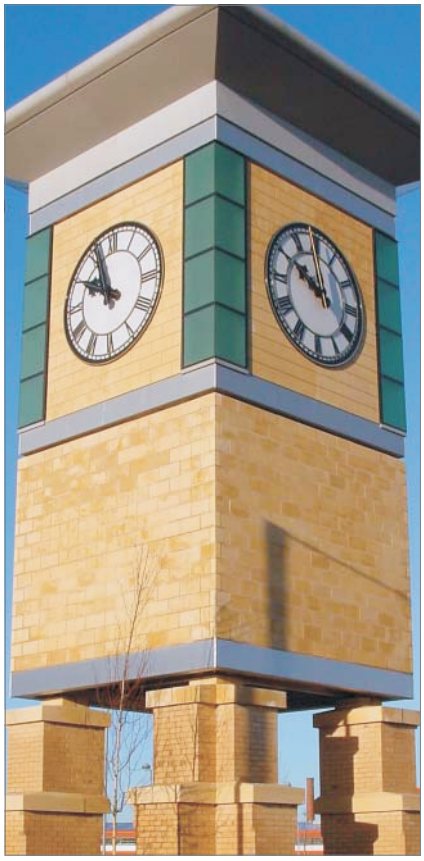

The addition of a clock to any building will not only enhance its appearance but raise its profile as a landmark.

## STANDARD CLOCK DIALS

TIME/MOVEMENT • RETAIL/URBAN • DESIGN/MANUFACTURING • INTERNATIONAL

**Complete** Signs. Tel: 0870 870 7331 Fax : 0870 870 7332 : info@completesigns.co.uk

Roman Convex dial, BS 20D45 blue & gold leaf.

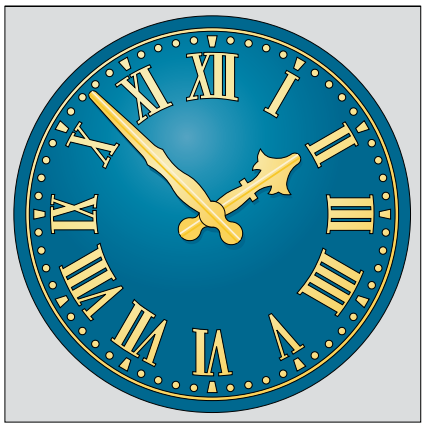

BS 20D45/RAL 5019 blue, gold leaf finish numerals and H101 hands.

BS 14C39/RAL 6002 green, gold leaf finish numerals and H107 hands.

# Roman Convex Dials

Traditional style clock dial with integral raised numerals, minute marks and outer ring. Interchangable hand designs.

## INSTALLATION

Surface fixed to wall. May be incorporated in clock case or surround (see page 6).

## MATERIALS AND FINISHES

Colour impregnated GRP fire resistant to BS476 class 1. UV light resistant crystic resin gel coat.

## COLOURS

In addition to the four standard colours, any other BS and RAL colour, or metallic effects such as bronze are available to order. Gold is 23 1/2 carat gold leaf.

## DIMENSIONS

Standard sizes are shown in the table below. Larger sizes can be made to order, but tooling may be required.

| †Size | A | B | C | D | *Approx. weight (kg) |
|---|---|---|---|---|---|
| 1'6" | 458 | 35 | 19 | 4 | 0.9 |
| 2'0" | 615 | 40 | 25 | 10 | 1.7 |
| 2'6" | 765 | 41 | 25 | 13 | 2.6 |
| 3'0" | 923 | 38 | 25 | 16 | 3.6 |
| 3'6" | 1,080 | 51 | 25 | 19 | 7.5 |
| 4'0" | 1,218 | 65 | 25 | 22 | 9.5 |
| 4'6" | 1,375 | 60 | 29 | 25 | 12.2 |
| 5'0" | 1,525 | 67 | 38 | 29 | 25.5 |
| 5'6" | 1,660 | 80 | 38 | 32 | 33.0 |
| 6'0" | 1,830 | 89 | 38 | 35 | 36.0 |
| 6'6" | 1,965 | 89 | 45 | 35 | 42.0 |

BS 00E53/RAL 9005 black, gold leaf finish numerals and H104 hands.

BS 00E55/RAL 9010 white, black finish numerals and H102 hands.

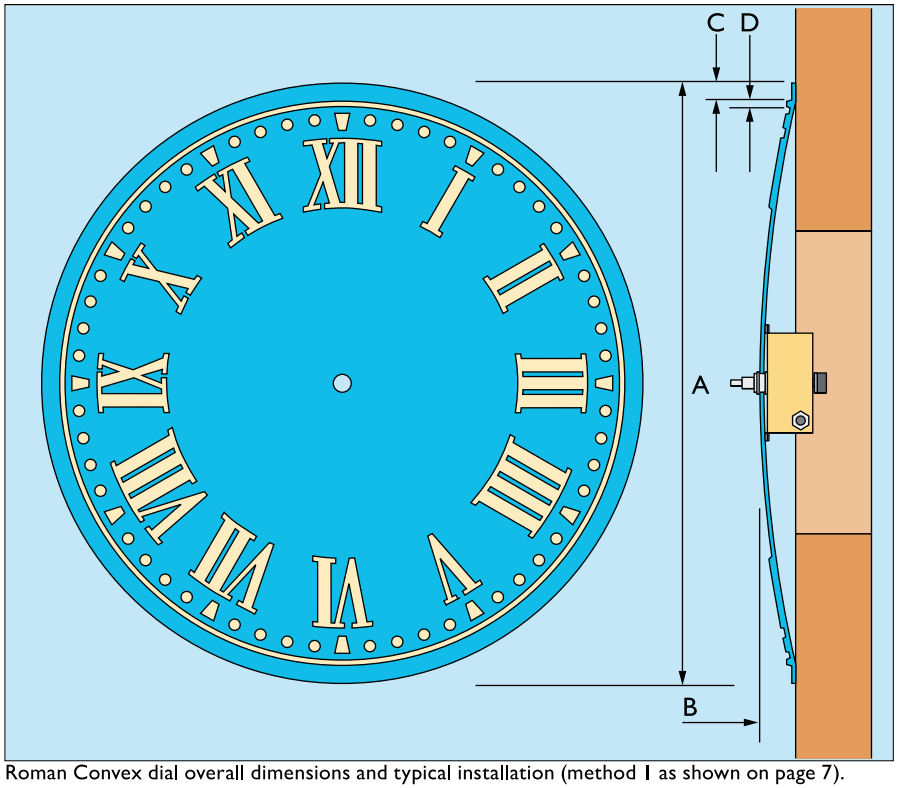


Roman Convex dial overall dimensions and typical installation (method 1 as shown on page 7).



©

**Complete** Signs

Backlit skeleton dial with gold leaf.

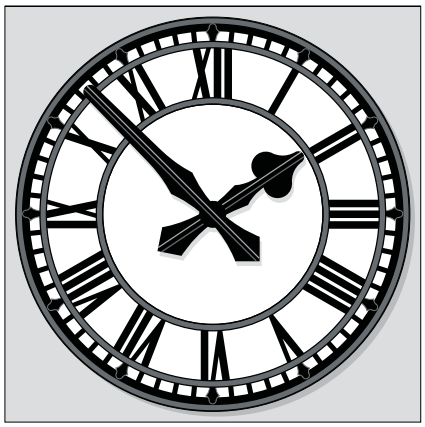

Black Roman Skeleton dial with translucent opal or white backing.

Black Roman Skeleton dial with gold leaf, translucent opal or white backing.

# Roman Skeleton Dials

Traditional design backed with translucent opal acrylic. Optional opaque white GRP backing, or no backing to reveal wall f nish. Centre star option on dials 1,072mm dia. and above. Interchangable hand designs.

## INSTALLATION

Surface f xed to wall or panel. May be incorporated in clock case or surround (see page 6). If wall mounted, an aperture (diameter W) is required behind dial for rear illumination. For even light coverage we recommend a minimum of 230mm from the rear of the dial to the lamps.

## MATERIALS AND FINISH

Colour impregnated GRPf re resistant to BS476 class 1. UV light resistant crystic resin gel coat. Translucent backing in grade 050 opal acrylic for backlighting.

## DIMENSIONS

Standard sizes are shown in the table below. Larger sizes can be made to order, but tooling may be required.

| †Size | Dial dia. A | Aperture dia. W | *Approx. weight (kg) |
|---|---|---|---|
| 1'6" | 458 | 420 | 1.0 |
| 2'0" | 615 | 555 | 1.4 |
| 2'6" | 765 | 720 | 1.9 |
| 3'0" | 923 | 865 | 2.7 |
| 3'6" | 1,072 | 1,012 | 4.5 |
| 4'0" | 1,218 | 1,160 | 8.2 |
| 4'6" | 1,378 | 1,300 | 11.7 |
| 5'0" | 1,530 | 1,445 | 15.8 |
| 5'6" | 1,678 | 1,600 | 20.3 |
| 6'0" | 1,850 | 1,740 | 25.0 |
| 6'6" | 2,018 | 1,905 | 29.2 |

Black Roman Skeleton dial with gold leaf and no backing, to reveal wall f nish.

Roman Skeleton dial showing centre star option available on dials 1,072mm and above.

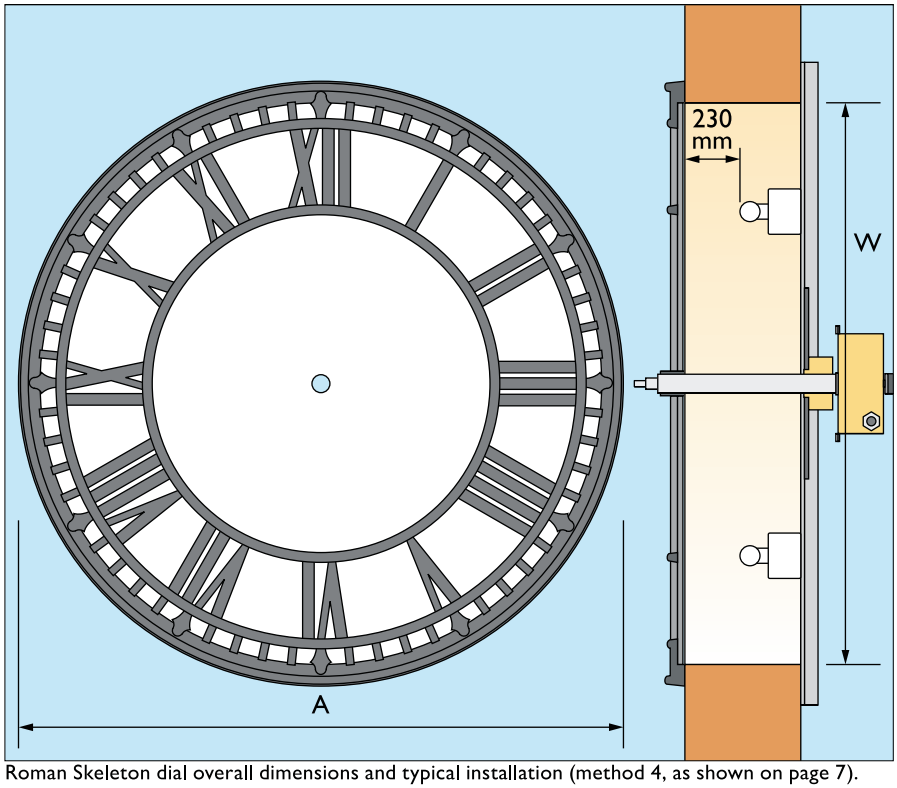


Roman Skeleton dial overall dimensions and typical installation (method 4, as shown on page 7).



©

**Complete** Signs

MIDDLETON dial with H106 hands in slim GRP case with clear protective cover option.

# Inscribed Dials

A range of designs in opal acrylic for backlighting.

Variations include non-backlit version using opaque white or coloured GRP with contrasting or gilded numerals and hands. Optional clear acrylic covers. Interchangable hand designs.

## INSTALLATION

Surface f xed to wall or panel. May be incorporated in clock case or surround (see page 6). If wall mounted, an aperture (diameter W) is required behind dial for rear illumination. For even light coverage we recommend a minimum of 230mm from the rear of the dial to the lamps.

## BACKLIT DIAL MATERIAL

Grade 050 opal acrylic for backlighting. Applied design: 10 year cast vinyl, colour f nish black.

## SOLID DIAL MATERIAL

GRP f re resistant to BS476 class 1, UV light resistant crystic resin gel coat. Any BS and RAL colour or metallic effects such as bronze or silver are available to order. 10 year cast vinyl, standard f nish black on white.

## BEZEL AND ACRYLIC COVERS

Bezel ring in aluminium, width and thickness in proportion with dial diameter.

Convex clear acrylic covers are available in a range of sizes from 294mm to 1,892mm diameter.

## DIMENSIONS

Standard sizes are compatible with the clock cases described on page 6. Other sizes are individually manufactured to order up to 2,400mm diameter.

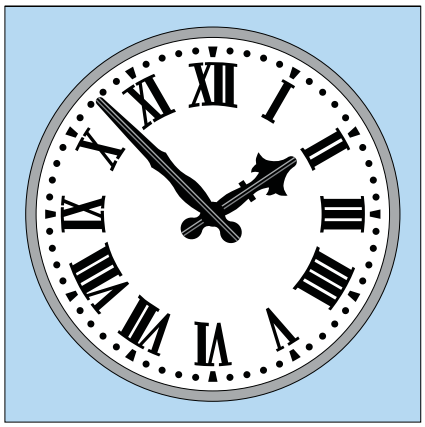

STIRLING dial design with H101 hands.

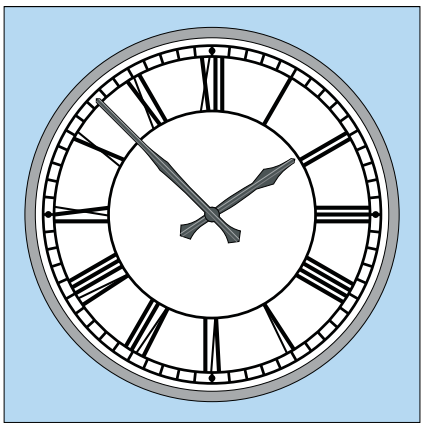

ROCHESTER dial design with H110 hands.

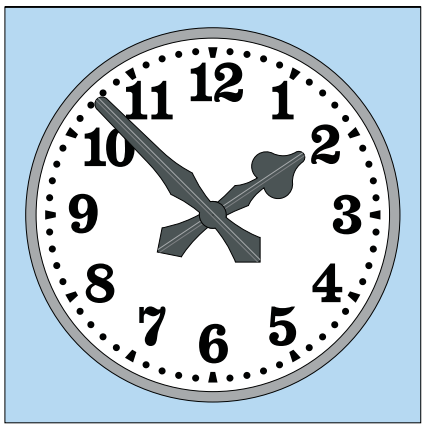

CLARENDON dial design with H109 hands.

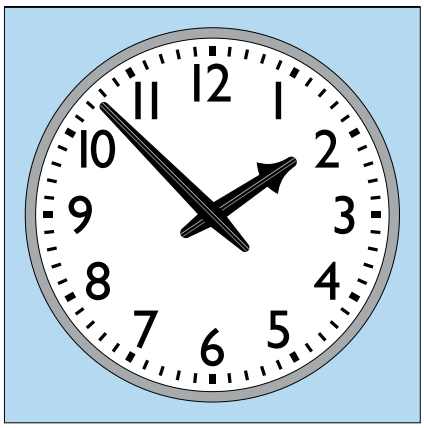

HIGHBURY dial design with H102 hands.

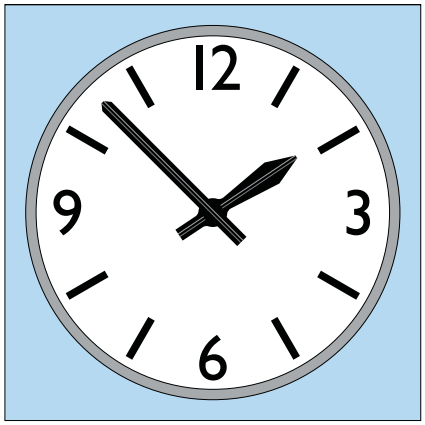

HOLYHEAD dial design with H104 hands.

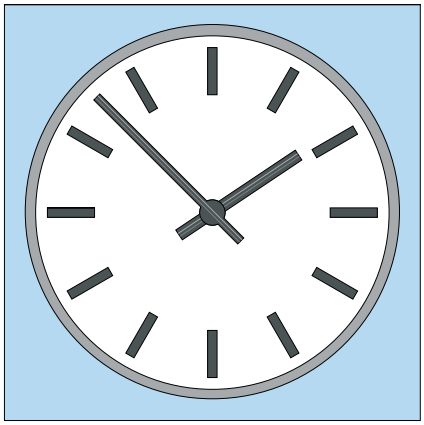

MIDDLETON dial design with H106 hands.

STIRLING dial in GRP with numerals and hands f nished in 23 1/2 carat gold leaf.

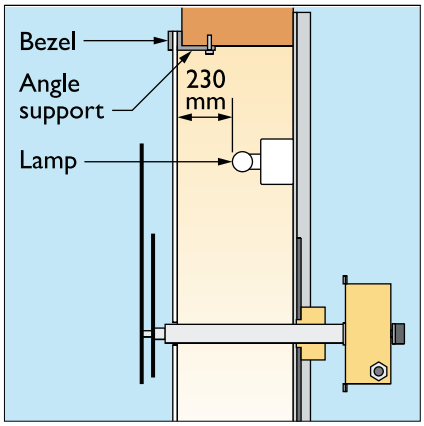


Typical installation (method 4 as shown on page 7).



Complete Signs ©

H101 hands on a backlit Roman Skeleton dial.

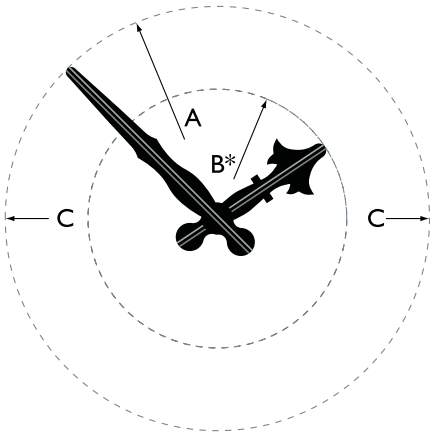


H101

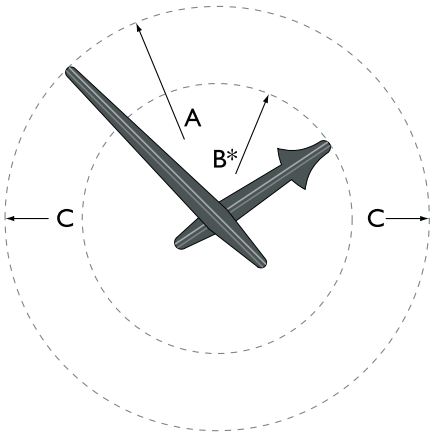


H102

# Hands

All designs of hand are externally balanced with a weight concealed behind the short extension beyond the centre. This ensures reliable operation of the clock movement.

Hands are strengthened with a centre rib and have a boss with two screws for securing to the hour or minute drive shaft.

## MATERIALS AND FINISH

Manufactured from aluminium, anodised for maximum corrosion resistance. Nickel plated brass boss.

Paint f nish: etch primer followed by 2-pack low-bake acrylic enamel.

Gilding where applicable is in 23 1/2 carat double thickness gold leaf.

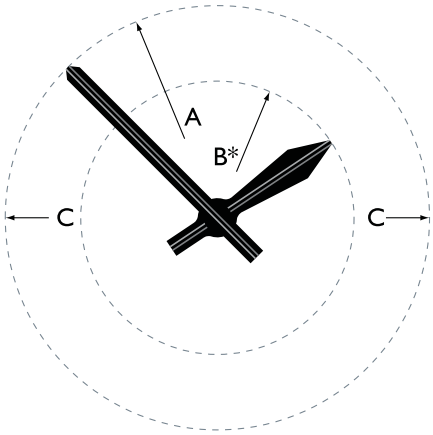


H104

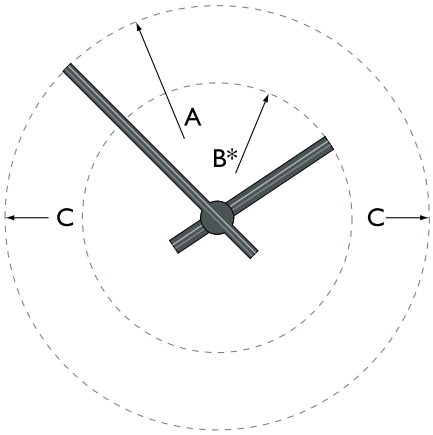


H106

## DIMENSIONS

A Minute hand centre to tip
B Hour hand centre to tip (*may vary slightly according to actual hand style)
C Minute hand tip sweep diameter

| Dial | A | B | C | Approx. wt (kg) |
|---|---|---|---|---|
| 1'6" | 195 | 130 | 390 | 0.1 |
| 2'0" | 274 | 168 | 548 | 0.2 |
| 2'6" | 346 | 220 | 692 | 0.3 |
| 3'0" | 415 | 254 | 830 | 0.4 |
| 3'6" | 490 | 315 | 980 | 0.5 |
| 4'0" | 552 | 355 | 1,105 | 0.7 |
| 4'6" | 629 | 405 | 1,258 | 0.9 |
| 5'0" | 692 | 452 | 1,385 | 2.7 |
| 5'6" | 765 | 500 | 1,530 | 3.0 |
| 6'0" | 842 | 547 | 1,685 | 3.6 |
| 6'6" | 908 | 570 | 1,816 | 4.6 |

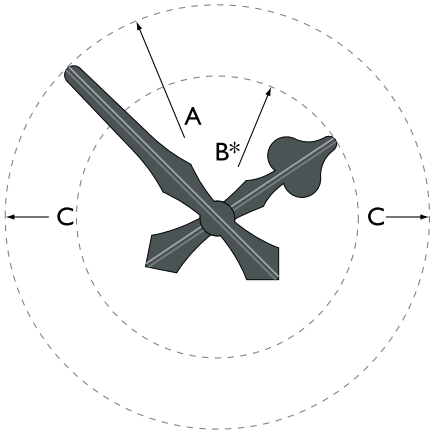


H109

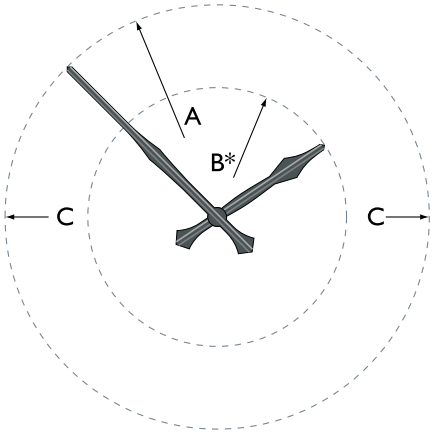


H110



©
**Complete** Signs

Deep case with backlit Roman Skeleton dial.

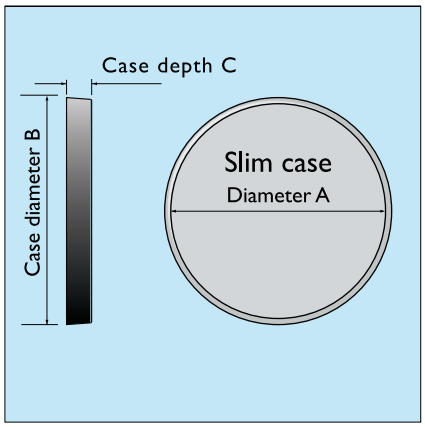


Slim case dimensions.

Slim case with non-backlit MIDDLETON dial incorporating client's logo and lettering.

# Clock cases

Housings for wall mounting or a 2-dial back-to-back conf guration for installation on a column or projecting wall bracket. Suitable for interior and exterior locations.

## INSTALLATION

Surface f xed to wall. Power supply to clock movement and separate power supply to lamps through rear panel. Dials are removable: rear access for servicing and maintenance optional.

## GRP CASE MATERIAL

Colour impregnated GRPf re resistant to BS476 class 1, UV light resistant crystic resin gel coat. Standard colour: black. Any other BS and RAL colour or metallic effects such as bronze or silver are available to order.

## ALUMINIUM CASE MATERIAL

Aluminium specf cation: 6082 T6 to BS1471. Paint f nish: etch primer followed by 2-pack low-bake acrylic enamel.

## ACRYLIC COVERS

Convex clear acrylic covers are available as an option, and are best suited for use with our range of Inscribed dials shown on page 4.

## DIMENSIONS AND WEIGHTS

Overall dimensions are given in millimetres,

* Weights are for a complete clock unit including dial, movement, hands and lighting.

† Other aluminium case sizes can be individually manufactured to order up to 2,400mm diameter.

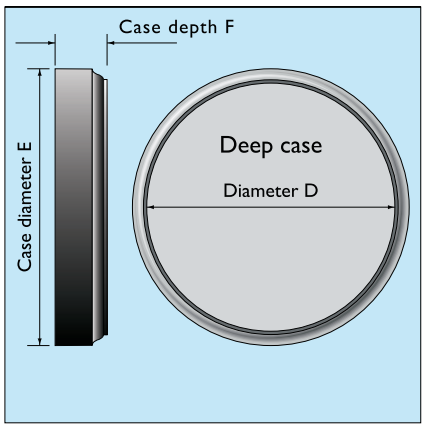


Deep case dimensions.

Deep case with Roman Convex dial.

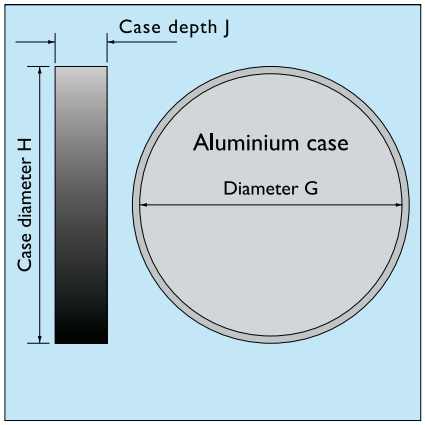


Aluminium case dimensions.

Aluminium case with backlit STERLING Inscribed dial and clear acrylic cover.

| | Slim GRP case | | | | Deep GRP case | | | | † Aluminium case | | | |
|---|---|---|---|---|---|---|---|---|---|---|---|---|
| Dial size | A | B | C | *Kg | D | E | F | *Kg | G | H | J min/std | *Kg |
| 1'6" | 463 | 498 | 72.5 | 10.5 | 463 | 578 | 166 | 13.0 | 515 | 519 | 150/300 | 15.5 |
| 2'0" | 620 | 655 | 72.5 | 12.5 | 620 | 741 | 166 | 14.5 | 681 | 685 | 150/300 | 18.0 |
| 2'6" | 770 | 805 | 72.5 | 16.5 | 770 | 890 | 192 | 17.0 | 837 | 841 | 150/300 | 23.0 |
| 3'0" | 930 | 965 | 72.5 | 22.5 | 930 | 1,090 | 220 | 23.5 | 1,006 | 1,010 | 150/300 | 30.0 |
| 3'6" | 1,075 | 1,110 | 72.5 | 28.5 | 1,075 | 1,198 | 225 | 30.0 | 1.171 | 1,175 | 150/300 | 37.0 |
| 4'0" | 1,321 | 1,356 | 72.5 | 35.5 | 1,321 | 1,465 | 273 | 37.5 | 1,321 | 1,325 | 150/300 | 42.0 |



©
**Complete** Signs

"Open" Roman Skeleton showing wall surface: installation method 2.

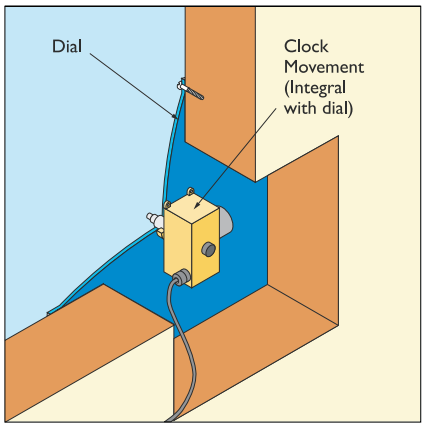


Installation method 1: non-backlit dial with integral movement.

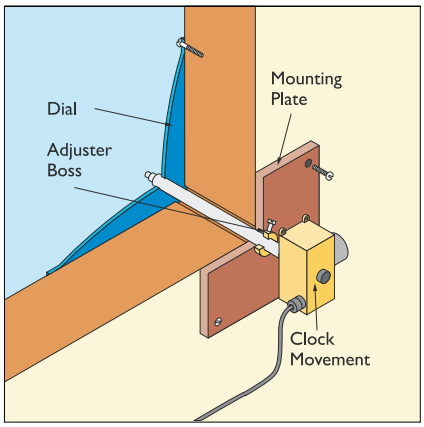


Installation method 2: non-backlit dial with movement driving through wall.

# Installation

Typical examples are shown, but our dials can be installed on virtually any structure or frame. Fixings will vary according to the size of dial and the wall material.

We recommend access to the movement from inside the building wherever possible. Alternatively, servicing and replacement of lamps can be done by removing the dial and hands from outside the building. Clock cases can be supplied with a rear access panel.

## MOVEMENTS

Each dial requires a separate movement of a compatible size. Movments with extended drive shafts are available for wall thicknesses of up to 1,550mm.

Movements are either synchronous, time controlled by the power supply frequency, or impulse, controlled by a master clock.

## MOVEMENTS AND CONTROL

Each dial requires a separate movement of a compatible size:

SYNCHRONOUS movements are time controlled by the power supply frequency and can be powered via a Smith of Derby Back-up system. Two back-ups are available: Auto Restart, which re-starts the clock at the correct time following a power failure, or Inverter Charger, which maintains continuous timekeeping during power failures and has a GPS time control option. Both types have automatic summer/winter time changeover.

IMPULSE movements operate on a low voltage signal from a Smith of Derby Master Clock unit, which maintains continuous timekeeping, has automatic summer/winter time changeover and GPS or radio time signal control options.

Full details of Smith of Derby movements and control systems are available.

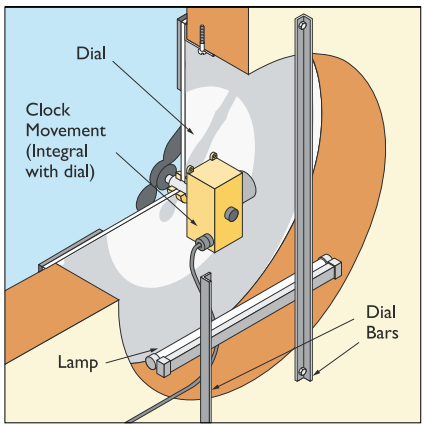


Installation method 3: backlit dial with integral movement.

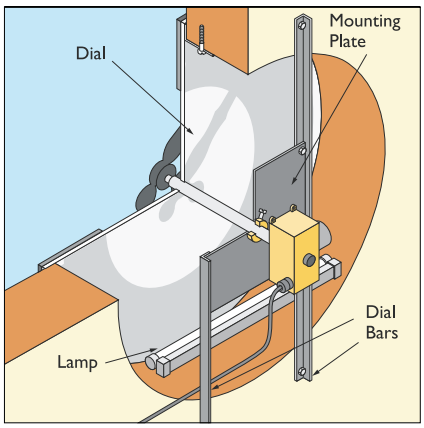


Installation method 4: backlit dial with movement driving through wall.

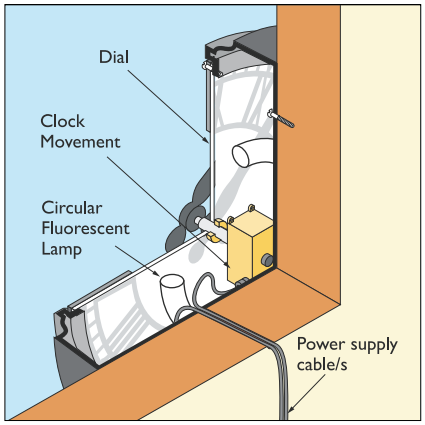


Installation method 5: clock case complete with internal illumination.

Synchronous clock movement integral with dial (installation methods 1 and 3).

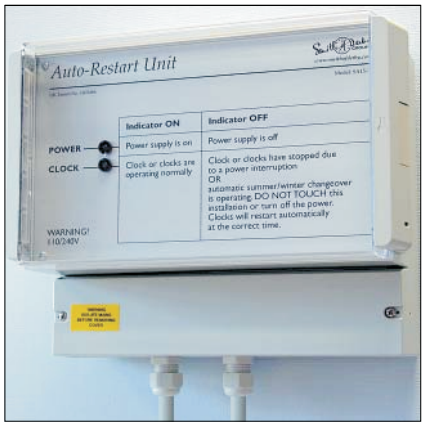


Auto-Restart back-up option for synchronous clock movements.

Master Clock Control for impulse clock movements.



Complete Signs ©

# Design options

## LOGOS AND LETTERING

Your logo, motif or name can be applied to the centre of the dial or on the surrounding area. Print industry standard artwork such as vector .epsf les should be supplied.

Please note that a logo placed centrally in the dial will be partially obscured by the hands centres, and that f lling the dial centre with logo and/or lettering may compromise readability of the dial.

## COLOURS AND FINISH

In addition to the standard colours for Roman Convex dials (page 2), any BS or RAL colour and a selection of metallic f nishes may be specif ed for GRP dials and aluminium cases. For applied vinyl graphics a full spectrum of solid and translucent colours is available.

## OPEN DIALS

Dial numerals, hour markers or a complete dial skeleton can be mounted directly on another surface such as brick or stone, with the movement located on the rear of the wall utilising installation method 2, shown on page 7.

## CUSTOM DESIGNS

The basic concept of a 12-hour analogue dial provides wide scope for an individually built clock. We specialise in the design and manufacture of custom clocks, either to clients specif cation or as commissioned from our own design department.

## INSTALLATION & AFTER SALES

Our engineers work throughout the UK on clock installation, annual maintenance visits and repair. Clocks can also be supplied for client installation.

To ensure your clock is kept in working order, our annual maintenance service covers one site visit per year with additional call-outs as required. Full terms and conditions are available on request.

## WARRANTY

12 months against failure through faulty workmanship or materials, subject to our conditions of contract available on request.

Roman Convex in special colour scheme with applied vinyl lettering.

Roman Convex with extended outer rim for gold leaf lettering and applied crest.

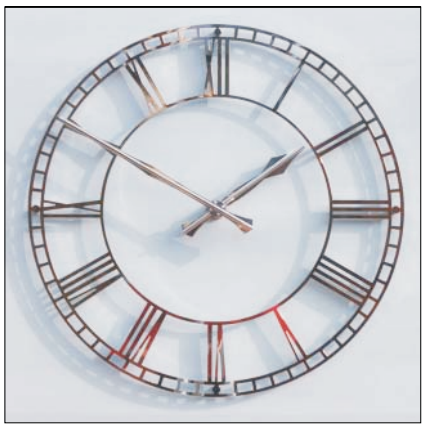

ROCHESTER dial in pierced and plated brass, spaced off wall to cast shadow on wall surface.

Custom dial in pierced aluminium with H104 hands, metallic f nish, mounted on GRP panel.

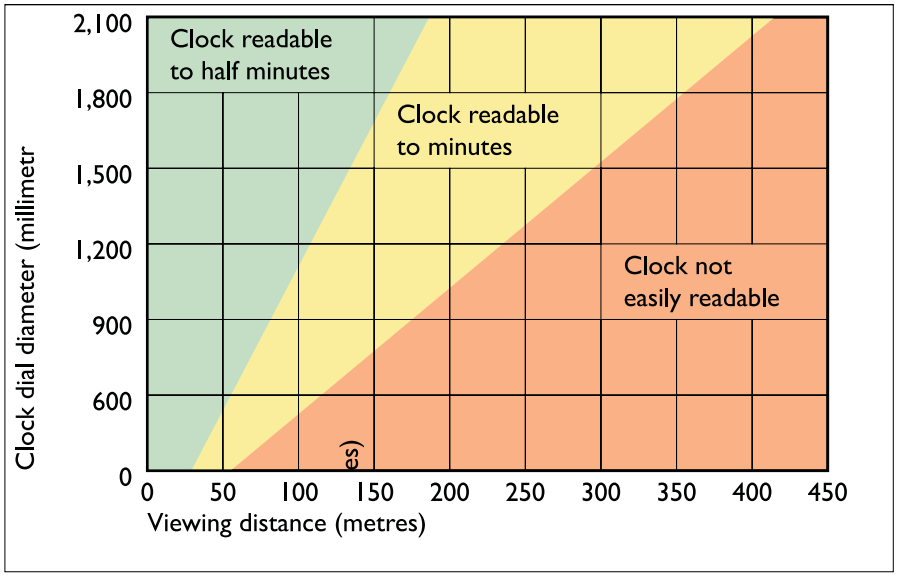


## DIAL READABILITY

Dial size, design, colour scheme, height above ground and viewing distance all affect ease of telling the time. As a general guide, dial diameter should be one tenth of the distance from ground to dial centre.

The graph gives a guide to visibility according on dial size and viewing distance. For example, a dial viewed from 150 metres should be a minimum of 750 mm diameter, or 1,700mm for easiest readability.

Complete Signs (Sign Products Limited) Studio 303 Madison House,
226 High Street Croydon Surrey CR9 1DF

©



**Complete** Signs